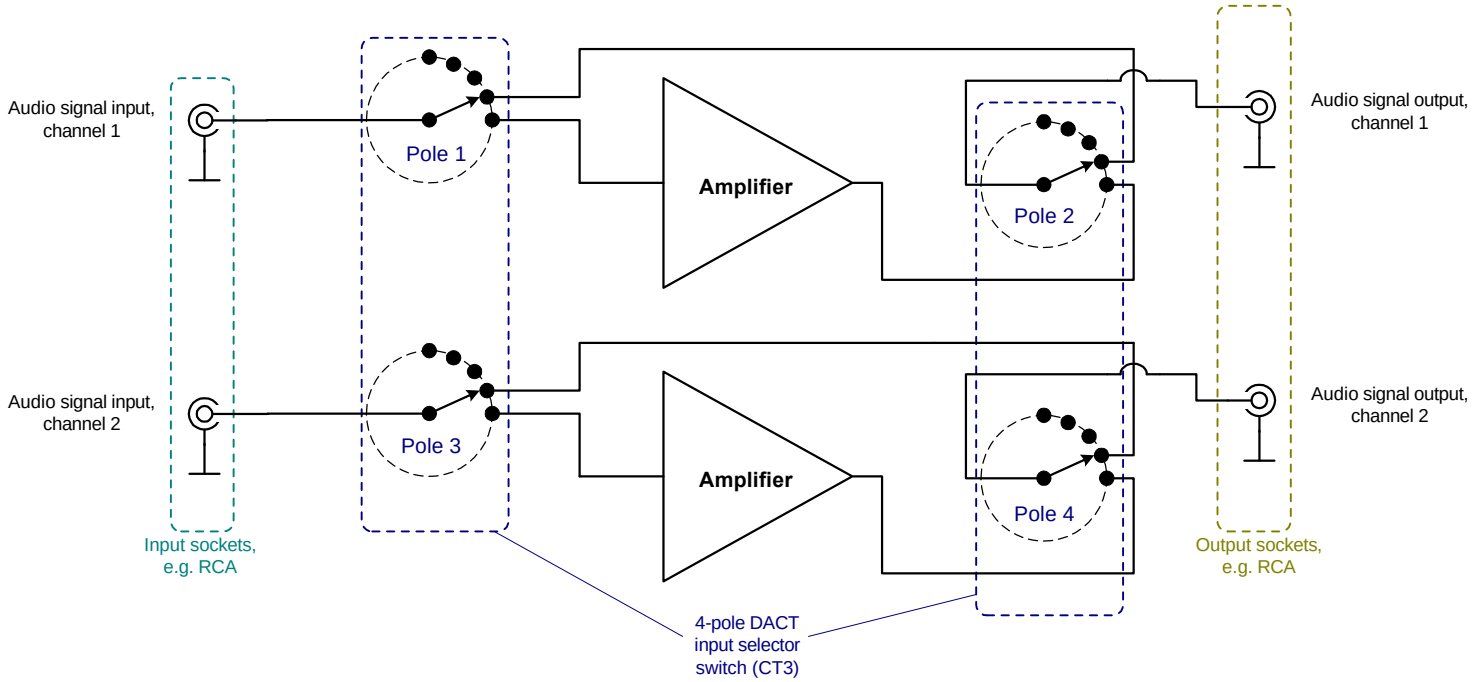
Audio signal input, channel 1
Audio signal input, channel 2
Pole 1
Pole 3
Amplifier
Amplifier
Pole 2
Pole 4
Audio signal output, channel 1
Audio signal output, channel 2
Input sockets, e.g. RCA
Output sockets, e.g. RCA
4-pole DACT input selector switch (CT3)